Guide

for operating cranes on construction sites

2014

Kreicom B.V.
Zuiderkoggeweg 29
1607 MV HEM
the Netherlands
✆ + 31 228 541586
✉ info@kreicom.com

www.kreicom.com

Disclaimer

The following applies to this guide. By using this guide, you agree to this disclaimer.

The content of this guide has been composed with due care and attention. Despite this due care and attention it is possible that some content may be incomplete and/or incorrect. There is no guarantee or warranty given in respect of the appropriateness, suitability or otherwise of this guide for any particular purpose.

Making decisions on the basis of this guide is at your own risk.

The publisher and author do not accept any liability for losses or damages resulting from the use of this guide.

Unauthorised or improper use of this guide, in whole or in part, may be an infringement of intellectual property rights and regulations in the broadest sense of the word.

Current laws and regulations concerning the content of this guide shall prevail at all times.

Contents

I. Introduction

This guide provides information about the safe use of crane tracks on construction sites and provides information about how the safety requirements can be met.

The crane tracks upon which construction cranes will be used are usually installed on a temporary basis and will remain in place for a period of time that can vary from several months to several years. During this period, they are used intensively and several cranes will possibly be operating on a single track.

Due to the large loads and the risk of subsidence, the crane could topple. Therefore, ensuring the stability of the foundation is of great importance as well as the strength and rigidity of the crane track construction.

These safety and operating instructions contain information regarding the construction and safe use of the crane track.

II. Foreword

The stability of construction cranes depends on the construction of the crane track and the construction crane itself.

The load capacity of the foundation surface will be determined after a soil investigation has been carried out. Then a construction engineer can determine whether additional measures should be taken and, if so, which.

In determining the choice of a construction crane, the working angles and the horizontal forces are determined.

Safe use of the construction crane should be assured by combining careful determination of the foundation substructure with the crane track construction.

The maximum working angle and horizontal force must be determined based on the crane data sheet. In addition, the height of the crane, the length of the boom, and the hoisting load should be taken into account. In order to determine the maximum crane forces, the "out of service" or "in service" crane tables can be used. This data can be found in the crane book, which should always be available in each crane.

External factors such as storm force winds that occur at the location should also be taken into account. (See chapter IV "Considerations for the foundation surface and crane track")

III. Calculation of crane tracks

Foundation Surface

The stability of construction cranes depends on the foundation surface and the construction of the crane track.

The load capacity of the foundation surface must be determined by a soil survey, on the basis of which the manufacturer can determine any additional measures that should be taken so as to ensure the foundation surface is sufficiently strong.

The load capacity of the foundation surface will determine whether it can carry the expected loads. If the load capacity is insufficient the crane track may subside, which could cause the crane to topple or derail.

If the load capacity is found to be insufficient, the following measures should be taken:

1. Improve foundation surface
2. Improve foundation surface in combination with drainage
3. Increase the load-bearing surface
4. Supplement or alternative

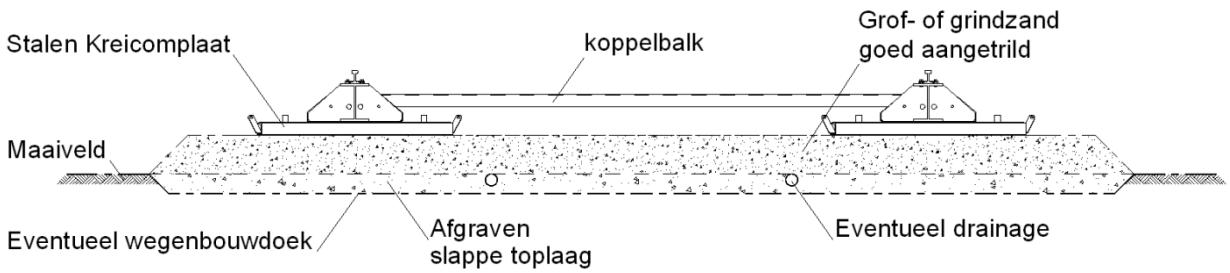

VOORBEELD GRONDVERBETERING VOOR KRAANBAAN

1. Improve foundation surface

Improvements to the foundation surface should only be carried out under the instruction of the constructor.

The result of the improvement should be that the foundation surface provides sufficient strength against subsidence, though some subsidence is acceptable if it only occurs evenly from all angles.

2. Improve foundation surface in combination with drainage

If the investigation of the soils and/or the assessment of the construction site by the contractor shows that improvement to the foundation surface is compromised by insufficient drainage of the trench, the constructor will arrange for drainage. If the drainage is insufficient or if the water table fluctuates, this could lead to subsidence of the crane track. If there is a difference in level between the crane track and the adjacent ground it could also be a reason to take certain measures. The constructor should follow up by improving the drainage.

3. Increase the load-bearing surface

This can be achieved by the use of wide steel bars, through which the transmitted forces will be divided over a larger foundation surface.

There are various types of sleeper beam available that are suitable for transferring the forces to the foundation surface. (See chapter VI. "Crane tracks and accessories")

4. Supplement or alternative

The capacity of the load-bearing surface could be sufficiently improved using metal sheets, which is an economic alternative to improve the foundation surface.
(Chapter VI "Crane tracks and accessories" and chapter VII "Kreicom plates").

IV. Considerations for the foundation surface and crane track

A. Maximum working angle
B. Horizontal force

A. Maximum working angle

This will be transferred to the rail mounted on the crane track sleeper beam.

The rail that is used has a maximum wheel load, see chapter VI "Crane tracks and accessories".

Wheel sets commonly come with 2 wheels. At working angles that are 2x the maximum wheel load it may be necessary to use dual wheel set (4 wheels) on each corner.

The choice of rail used in this guide is determined on the basis of both the vertical force and horizontal force acting upon it.

B. Horizontal force

The horizontal force is determined on the basis of the swing forces and the wind forces.

In practice, the horizontal force due to wind/storm is standard, but external factors, such as the conditions at the construction site should be taken into account. (Coastal area, tall buildings nearby)

I. greatest wind force
II. large wind force
III. low wind force

These forces will be transferred to the rail via the crane wheel flanges, and to both sleeper beams by means of the rail pads by which the rails are mounted to the sleeper beams. The horizontal force is then transferred to the foundation surface by friction.

In all uses of beams on hard foundation surfaces (such as concrete), for both fixed and mobile installations, the beams must be fixed in order to be able to transfer the horizontal forces acting on the concrete construction. In most cases, this can be achieved using a simple retaining structure. Special solutions can be designed and/or manufactured in consultation with the crane supplier.

V. Placement of the construction crane

In all cases, the crane must be placed on a flat surface, without exception.

The foundation surface itself may be:

A. Hard foundation surface (such as concrete)
B. Unsurfaced foundation surface

A. Placement on a hard foundation surface (such as concrete)

The crane can be placed on concrete. The concrete manufacturer shall calculate the required strength of the concrete using load data acquired from the crane supplier.

This installation may be:

A.1. A fixed installation
A.2. A mobile installation

A.1. In a fixed installation

The crane will be fixed directly to concrete, for example, with folding anchors. The use of a particular concrete construction may not be possible due to economic reasons, for example, due to the cost of disposal of this construction after the work is complete.

The vertical forces can be transferred by means of steel bars that are widely distributed. In this instance, the crane can be placed on sleeper beams with rails, upon which ballast can be placed. The crane can be directly installed onto the sleeper beams with wheels.

In both instances, with or without wheels, the horizontal forces will be transferred to the concrete structure. See "Considerations for the foundation surface and crane track", chapter IV.

It is possible to spread the working angles on an even larger area. This may be accomplished using Kreicom plates (6mx2m) under the sleeper beams. These are closed boxes of high-quality steel, which spread the load over a width of 2.05 metres. See Chapter VII "Kreicom plates".

A.2. Mobile installations on concrete

The crane is placed directly on the sleeper beam via the rail. The type of sleeper beam and rail bar is further specified in Chapter VI. "Crane tracks and accessories".

A. Placement on unsurfaced foundation surface

Determining the load-bearing capacity of the ground is necessary in order to reduce the risk of the crane track subsiding due to insufficient capacity.

In relation to this the structure of the ground (disturbed or undisturbed) as well as the type of ground (clay, sand, etc.) is important. Other factors may also affect the capacity such as inadequate water drainage and vibrations in the ground from the construction site.

The results of the soil investigation will allow the manufacturer to determine any additional measures that may need to be taken.

In order to do this, it is necessary to provide the constructor with the following information:

a. the crane load data supplied by the crane supplier,
b. the crane track construction data, whether or not it is used in combination with the Kreicom plates.

VI. Crane tracks and accessories

A. Available crane track types
B. Rail pads
C. Bends
D. End stop tracks and Buffers

A. Available crane track types

The applicable crane beams are sleeper beams with a width of 1m or 1.25m, which are constructed in a plate construction with ½ HE 800A, HE 400B or HE 600B, with standard lengths of 12 m and 6 m. There are 1.3m and 4.5m adapters available (consult crane supplier).

A rail is built onto the crane beams with a face width of ±72mm upon which the crane wheels travel. The crane wheels each have two flanges 90mm apart.

Kreicom uses the following rails on sleeper beams:

S-41 rail quality with a minimum tensile strength of 690 N/mm2
mounted on sleeper beam ½ HE 800A,
maximum wheel load of 400 kN

S-49 rail quality with a minimum tensile strength of 880 N/mm2
mounted on sleeper beam ½ HE 800A or sleeper beam HE 400B
maximum wheel load of 500 kN
In certain cases (for example, combined horizontal and vertical forces on the rail), the maximum wheel pressures differ and consultation with the crane supplier will be necessary.

UIC-54A with maximum wheel load of approx. 750 kN and minimum tensile strength 880 N/mm2
Mounted on sleeper beam HE 600B

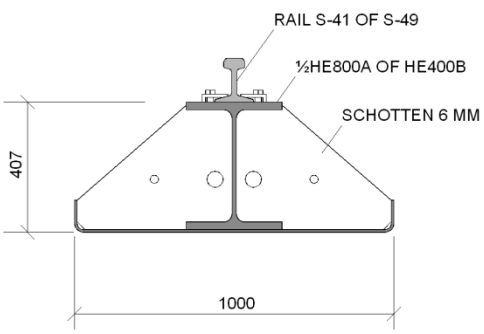

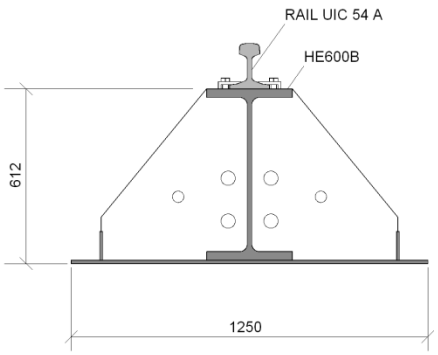

In order to make a choice of sleeper beam and rail, consultation with the crane supplier is necessary.

B. Rail pads

The crane track consists of a track, interconnected by means of rail pads. The steel rail pads are arranged at equal distances at approx. 6m from one another. They keep the sleeper beams at equal distances from one another and transfer the horizontal force. There should be two rail pads mounted per track for each 12m stretch.

The rail pads should possess sufficient rigidity

Rail pads are available in the following dimensions:

3.8m, 4.2m, 4.5m, 4.6m, 5m, 6m, 8m, 10m and 12m
Only use alternative sizes after consulting the crane supplier.

C. Bends

Sometimes it is desirable to include bends on the crane track so the construction crane can operate in accordance with the shape of the building project. The bend beams are designed as sleeper beams with a construction width of 1m

The standard inner radius is 12m and, depending upon the track gauge of the wheel sets, the outer radius is available in 16.5m or 18m.
There are several 90º bends available in parts of 30º, 22.5º, 15º, 5º, 3º and 2º.

Regarding availability, range and application, consultation with the crane supplier is required.

The crane must be suitable to ride on bends.

D. End stop tracks and Buffers

The application of end stop tracks and buffers is a safety device required when using a crane track. The buffer should be placed 2 metres before the end of the rail. End stop tracks should be placed in such a way that the crane comes to a standstill 1.5m before the buffer.

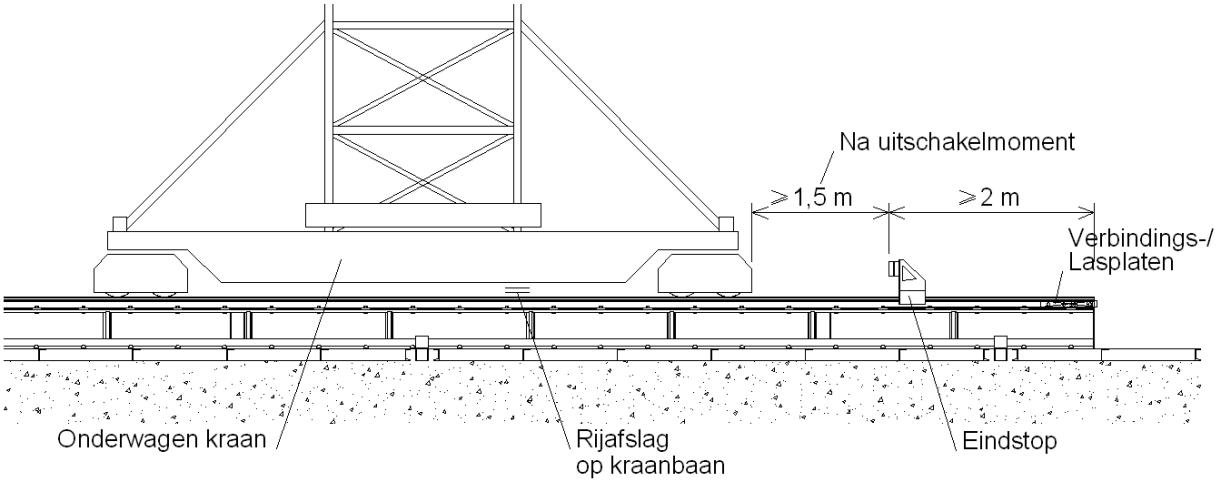

VERPLICHTE VOORZIENINGEN VOOR KRAANBAAN

The buffers are designed in such a way that they first deform (crush zone) and then slide to the end of the crane track at which point a braking force will be applied. At the end of the rail track, sufficient connecting plates/weld plates should be mounted for the buffers to push against.

Example of mounting buffers and end stop tracks

VII. Kreicom plates

The working angle may be spread over a larger area by using Kreicom plates under the sleeper beams. This specially designed, high strength steel plate divides the load over a width of 2.05 m. Each with an area of 12 m2 and a weight of 1900 kg, the plates are a strong and safe means to increase the load-bearing surface.

Due to these plates, vertical forces are divided over a width of 2.05 m.
Concrete slabs can also be used, but this will incur more handling costs and, because of the weight, significantly more transport costs.

The standard dimensions of the Kreicom plates are 6m x 2m and 2m x 2m (thickness 13.4cm)

Due to the construction of the Kreicom plates, their weight is approximately equal to a 6-metre sleeper beam with rail. As a result, this is an excellent logistics solution for transportation. In the Netherlands, 24 metres of Kreicom plates track (8 plates of 6m x 2m) can be transported together with 24 metres (4x12m) of crane track on one semi-trailer.

Picture of Sleeper beam on Kreicom plate, showing the distribution on the foundation surface

VIII. Earthing

In relation to lightning protection, earthing the crane track is not mandatory. Earthing of the crane system through the crane track is not permitted.

For more information on how to earth the crane, please refer to:

VG Bouw / Komat – Crane tracks on construction sites, Guide 1 April 1998
Chapter 3, Crane track execution - 4. Earthing

IX. Special use: Portals/Traverse

In the event that space to operate on a construction site is limited, it may sometimes be necessary to position the construction crane in such a way that traffic can drive under it.

Contact the crane supplier for these possibilities.

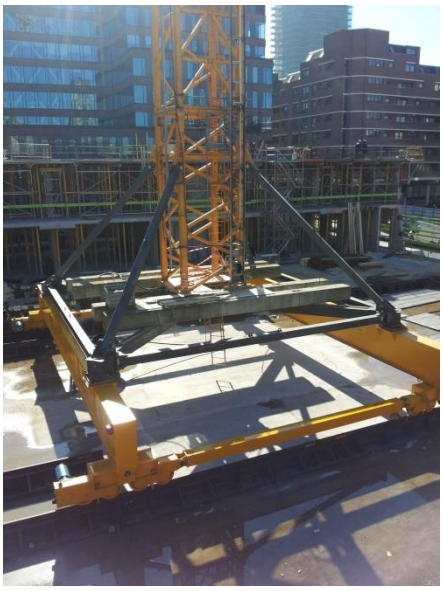

Image showing traversing

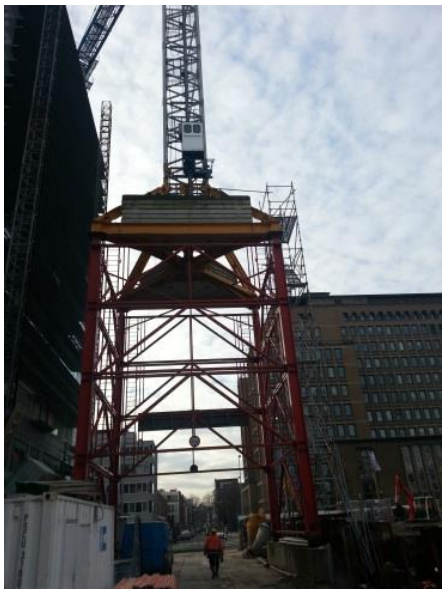

Image showing portal

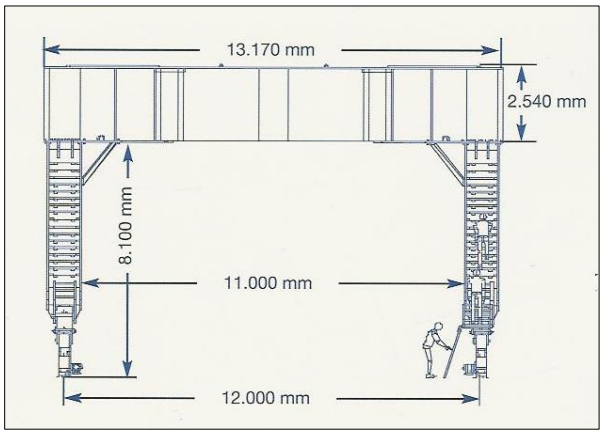

Example 12m installation,
several width variations possible.

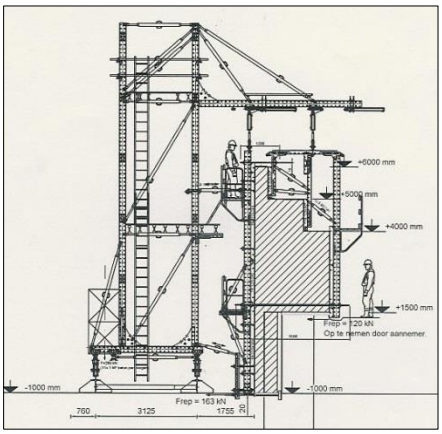

Example formwork system
on crane track

It is possible to create a path or road between the sleeper beams, consult your crane track supplier to discuss the right track gauge.

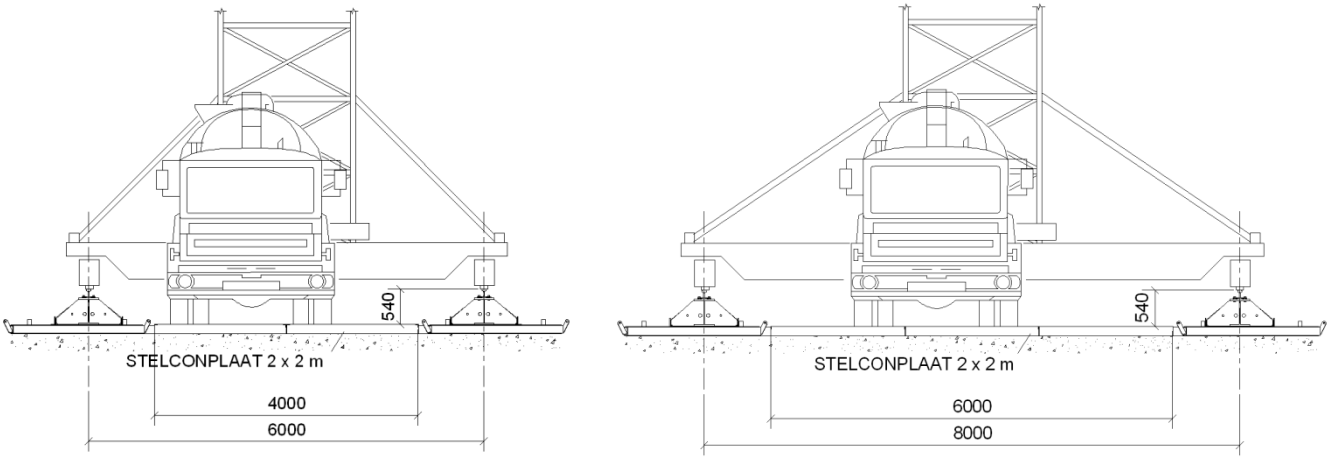

Example path or road using track gauge of 6m and 8m

Crane track can also be placed on sheet piling for the purpose of traversing.

X. Maintenance and inspection of the crane track before and during use

For safe operation, it is necessary to carry out an inspection of the crane track at various times.

Daily:

Check that:

a. The crane track is free of obstacles.
b. The crane track is visually in good condition and that the site is sound.

Monthly/four weekly:

At least the following should be checked:

a. Visual check that the crane track is level
b. Free of obstacles
c. Absence of metal chips or swarf on the wheels, especially on bends
d. All connections are tight and secure
e. Site power cable
f. End stops are present and working
g. Buffers are present and working

These checks should be recorded in writing, stating the date, name of inspector, type of crane.

For more information on this check, please refer to:

VG Bouw / Komat – Crane tracks on construction sites, Guide 1 April 1998
Chapter 8, Four weekly check

Quarterly:

There should be a comprehensive check on the above-mentioned components including a thorough check of power, anchoring, drainage and subsidence.

For more information on this check, please refer to:

VG Bouw / Komat – Crane tracks on construction sites, Guide 1 April 1998
Chapter 8, Quarterly check

XI. Checking the crane track is level

The crane track should be installed level and maintained as such.

In order to ensure this, regular checks to ensure that the crane track is level should be carried out.

The measurement should be carried out in accordance with the rules set out in:
VG Bouw / Komat – Crane tracks on construction sites, Guide 1 April 1998
Chapter 8, Checking the crane track is level

XII. Legal requirements

When using the crane tracks at a construction site, the general requirements regarding health, safety and welfare of employees must be complied with as stipulated in the Health and Safety regulations.

With respect to the electrical component of the crane, the regulations of NEN 1010 and the maintenance requirements of NEN 3140 apply.

XIII. Literature

In this guide reference is made to:

P 127, Arbeidsinspectie, Kraanbanen voor bouwkranen

Uitgave van Directoraat-Generaal van de Arbeid van het Ministerie van Sociale Zaken en Werkgelegenheid, Voorburd, 4e druk 1985

VGBouw, Kraanbanen op Bouwplaatsen

VGB/KOMAT – Aanbeveling nr. 1, april 1998

Aandachtspunten Stabiliteit Bouwmaterieel op de bouwplaats - rapport 123A

RRBouw, Stichting Research Rationalisatie Bouw, 2006

The NEN standards apply:

NEN, Nederlands Normalisatie-instituut, Delft